/ Perfect Charging / Perfect Welding / **Solar Energy**

SHIFTING THE LIMITS

Fronius Galvo 208-240: Symbol Explanations and Choosing the Location Notes on Installation and Connection

EN-US

Operating Instructions

Inverter for grid-connected photovoltaic systems

42,0426,0182,EA 011-19122016

Contents

Symbol Explanations

Explanation of Safety Instructions

DANGER! Indicates an immediate danger. Death or serious injury may result if appropriate precautions are not taken.

WARNING! Indicates a possibly dangerous situation. Death or serious injury may result if appropriate precautions are not taken.

CAUTION! Indicates a situation where damage or injury could occur. Minor injury or damage to property may result if appropriate precautions are not taken.

NOTE! Indicates the possibility of flawed results and damage to the equipment.

IMPORTANT! Indicates tips for correct operation and other particularly useful information. It does not indicate a potentially damaging or dangerous situation.

If you see any of the symbols depicted in the "Safety Rules," special care is required.

Explanation of Symbols – Selecting a Location

The inverter is suitable for indoor installation.

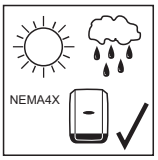

The inverter is suitable for outdoor installation.

Because of its NEMA4X protection class, the inverter is not susceptible to hose water on any side and can also be operated in moist environments.

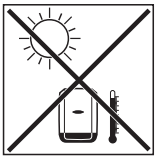

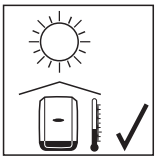

In order to keep inverter heating as low as possible, the inverter should not be exposed to direct sunlight. Ideally, the inverter should be installed in a protected location, e.g., near the solar modules or under an overhanging roof.

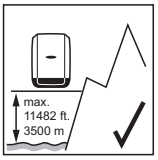

Altitude above sea level: up to 11,482 ft. (3500 m)

IMPORTANT! The inverter must not be installed or operated above an altitude of 11,482 ft. (3500 m).

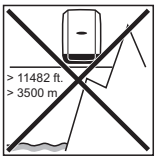

The max. permissible DC voltage of the inverter depends on the altitude:
- 0 - 6561 ft. (0 - 2000 m) ... $U_{DC\ max}$ = 550 V
- > 6561 - 8202 ft. (> 2000–2500 m) ... $U_{DC\ max}$ = 540 V
- > 8202 - 9842 ft. (> 2500–3000 m) ... $U_{DC\ max}$ = 480 V
- > 9842–11482 ft. (> 3000–3500 m) ... $U_{DC\ max}$ = 430 V

ft. (m)	$U_{DC\ max}$
> 9842 - 11482 ft. (> 3000 - 3500 m)	430 V
> 8202 - 9842 ft. (> 2500 - 3000 m)	480 V
> 6561 - 8202 ft. (> 2000 - 2500 m)	540 V
0 - 6561 ft. (0 - 2000 m)	550 V

The output power reduces when the device temperature is too high, and this may occur earlier than normal at increased altitudes.

Do not install the inverter:
- where it may be exposed to ammonia, corrosive gases, acids or salts
  (e.g., fertilizer storage areas, vent openings for livestock stables, chemical plants, tanneries, etc.)

During certain operation phases the inverter may produce a slight noise. For this reason it should not be installed in an occupied living area.

Do not install the inverter in:
- areas where there is an increased risk of accidents, e.g., from farm animals (horses, cattle, sheep, pigs, etc.)
- stables or adjoining areas
- storage areas for hay, straw, chaff, animal feed, fertilizers, etc.

Do not install the inverter in:
- dusty rooms and environments
- rooms and areas with large amounts of conducting dust particles (e.g., iron filings)

Do not install the inverter in:
- greenhouses
- storage or processing areas for fruit, vegetables, or viniculture products
- areas used in the preparation of grain, green fodder, or animal feeds

Symbol Explanations – Installation Position

The inverter is suitable for vertical installation on a vertical wall or pillar.

The inverter is suitable for horizontal installation.

The inverter is suitable for installation on an inclined surface.

Do not install the inverter on an inclined surface with the connection sockets facing upwards.

Do not install the inverter in a sloping position on a vertical wall or pillar.

Do not install the inverter in a horizontal position on a vertical wall or pillar.

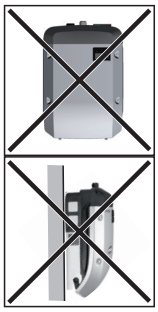

Do not install the inverter on a vertical wall or pillar with the connection sockets facing upwards.

Do not install the inverter so that it is overhanging with the connection sockets facing upwards.

Do not install the inverter so that it is overhanging with the connection sockets facing downwards.

Do not install the inverter on the ceiling.

Choosing the Location

Intended Use

The solar inverter is designed exclusively to convert direct current from solar modules into alternating current and feed this power into the public grid.
The following are deemed not to be in conformity with its intended purpose:
- utilization for any other purpose, or in any other manner
- alterations to the inverter that are not expressly recommended by Fronius
- installation of components that are not expressly recommended or sold by Fronius.

The manufacturer is not responsible for any damage resulting from improper use.
All warranty claims are considered void in such cases.

Proper use also means
- carefully reading and obeying all the instructions and safety and danger notices in the operating instructions
- carrying out all the specified inspection and servicing work
- installation as per operating instructions.

When configuring the photovoltaic system, make sure that all photovoltaic system components are operating completely within their permitted operating range.

All measures recommended by the solar module manufacturer for maintaining solar module properties must be followed.

Utility company regulations regarding grid power feed must be followed.

Choosing the Location (General)

Please note the following criteria when choosing a location for the inverter:

Only install on a solid surface.

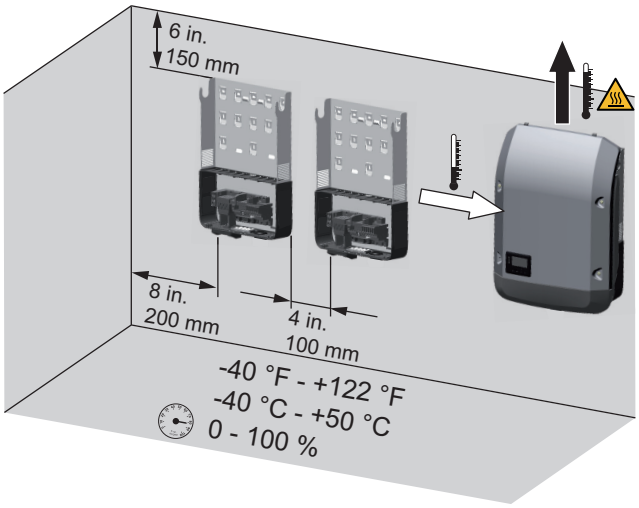

Max. ambient temperatures:
-40°F – +122°F
(-40°C – +50°C)

Relative humidity:
0–100%

The air flow direction within the inverter is from the left to the top (cold air intake on the left, hot air outflow at the top).
The exhaust air can reach a temperature of 158°F (70° C).

When installing the inverter in a switch cabinet or similar closed environment, it is necessary to make sure that the hot air that develops will be dissipated by forced-air ventilation.

If you wish to install the inverter on the outer walls of cattle stables, it is important to keep a minimum clearance of 2 m between all sides of the inverter and air vents and other openings.
The place of installation should not be exposed to ammonia, corrosive gases, salts, or acids.

Installation information

Selecting dowels and screws

IMPORTANT! Depending on the surface, different mounting materials may be required for installing the wall bracket. These mounting materials are not part of the scope of delivery for the inverter. The installer is responsible for selecting the proper mounting materials.

Screw Recommendation

To install the inverter, the manufacturer recommends using steel or aluminum screws with a diameter of 0.2–0.3 in. (6–8 mm).

Attaching the Wall Bracket

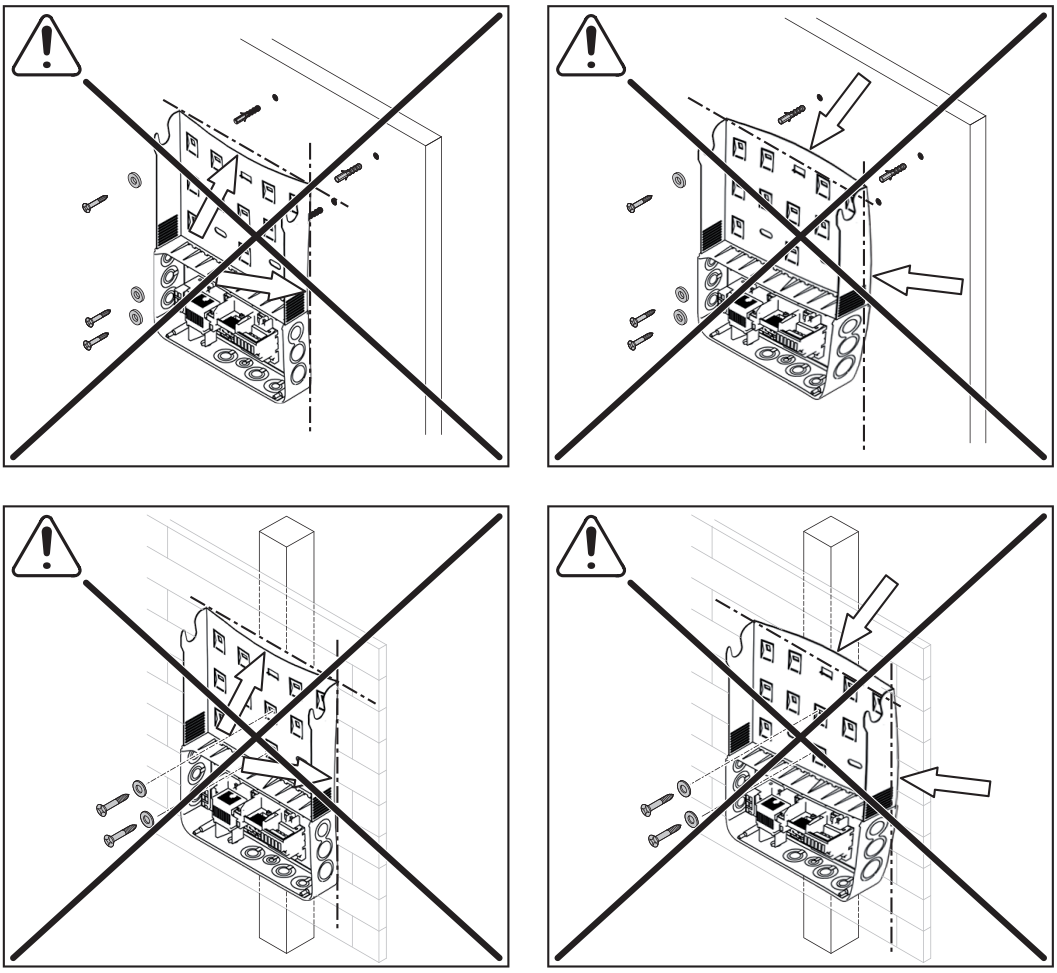

NOTE! When attaching the wall bracket to the wall or a pillar, make sure that the wall bracket is not warped or deformed.

Installing the Inverter on a Mast

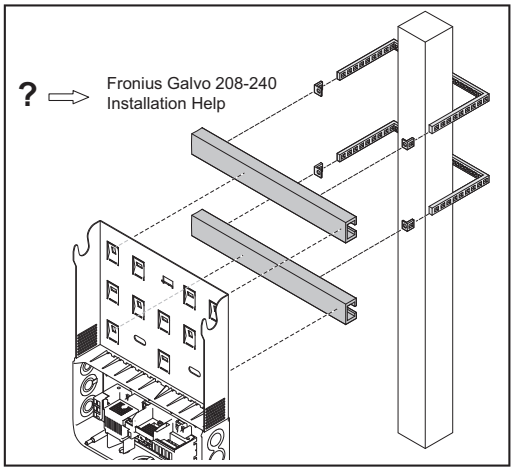

Example of a mast fixing set

When installing the inverter on a mast or a vertical pillar, Fronius recommends using a commercially available mast fixing set.

The mast fixing set allows the inverter to be installed on a round or square mast with different cross sections.

Notes on the Knockouts

General

The wall bracket contains several knockouts of different sizes. When knocked out, the openings are used for the inputs of various cables:

1/2 in. for data communication cables (DATCOM)

3/4 in. for AC and DC cables

* Depending on the local authority, a ground stake (GET) may be required. The cable for the ground stake can be passed through an opening on the bottom of the wall bracket designed for this purpose.

IMPORTANT! The knockouts on the back of the wall bracket are made from metal.

CAUTION! Danger of short circuit from loose metal parts from knockouts. Loose metal parts in the inverter may cause short circuits when the inverter is powered up. When removing knockouts, make sure that

- no loose metal parts fall into the inverter connection area
- any metal pieces that do fall into the connection area are removed immediately.

Removing/Drilling out a Knockout

IMPORTANT! The knockouts on the side and bottom of the wall bracket may be broken out either with a hammer and screwdriver or with a step drill.
The knockouts at the back should only be removed with a step drill.

When knocking/drilling out the knockouts wear suitable safety goggles.

When using a hammer and screwdriver, only remove knockouts from the inside out.

When drilling out the knockouts, only use a suitable step drill.
Do not use a spiral drill.

When using a step drill, only remove knockouts from the outside in.

When drilling out with a step drill, take care not to damage the DC disconnector or the AC/DC connection block.

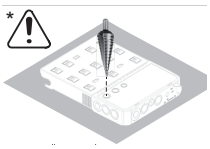

When drilling out the knockouts on the back, lay the wall bracket on an even surface with the back facing upwards so that filings and pieces of metal can fall out of the wall bracket.

Attach corresponding conduits to all knocked/drilled out knockouts.
When installing outside, only use watertight conduits and conduit fittings.
Conduits and conduit fittings are not part of the scope of supply for the inverter.

Suitable Grids

Suitable Grids

Inverters can be operated on the following grids:

- 208 V Delta, without neutral conductor
- 208 V Delta: 120 V WYE, with neutral conductor
- 220 V Delta, without neutral conductor
- 220 V Delta: 127 V WYE, with neutral conductor
- 240 V Delta, without neutral conductor
- 240 V: 120 V WYE, with neutral conductor
- 240 V: 120 V split phase, with neutral conductor

Notes on connection area

Permitted Cables

Cables with the following structure can be connected to the AC and DC terminals of the inverter:

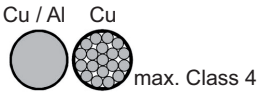

- Copper or aluminum: round, single-wire
- Copper: round, fine wire up to conductor class 4

Cable cross sections:
Cu: min. AWG 14 – max. AWG 6
Al: AWG 6

Terminal tightening torque:
15.93 lb-in / 1.33 t. lb. / 1.8 Nm

Connecting Aluminum Cables

The terminals are designed for connecting single-wire, round aluminum cables. The following points must be taken into account when connecting aluminum cables due to the non-conducting oxide layer of aluminum:
- reduced rated currents for aluminum cables
- the connection requirements listed below.

NOTE! Take into account local specifications when configuring cable cross sections.

Connection Requirements:

1 Carefully clean off the oxide layer of the stripped end of the cable, e.g., using a knife.

IMPORTANT! Do not use brushes, files, or sandpaper; aluminum particles may get stuck and can transfer to other cables.

2 After removing the oxide layer of the cable end, rub in a neutral grease, e.g., acid-free and alkali-free Vaseline.

3 Then immediately connect it to the terminal.

Repeat the steps above whenever the cable is disconnected and then reconnected.

Notes on grid connection

Monitoring the Grid

IMPORTANT! The resistance in the leads to the AC-side connection terminals must be as low as possible for optimal functioning of grid monitoring.

Grid Connection

NOTE! In order to ensure a proper ground connection, all three GND ground terminals must be tightened with the specified torque during installation.

NOTE! When connecting the AC cable to the AC terminal, create loops of min. 4 in. (102 mm) with the AC cables.

IMPORTANT! The GND ground conductor of the AC cable must be laid so that this is the last to be disconnected.
Cut GND ground conductors longer, for example, and make them into a loop.

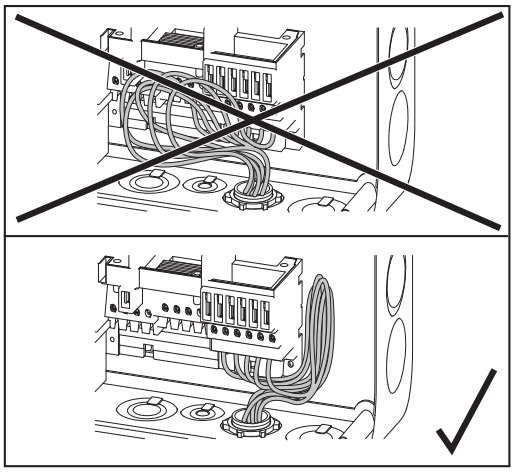

If AC cables are laid over the shaft of the DC main switch, or across the DC main switch connection block, they could be damaged when the inverter swivels in, or the inverter could be prevented from swiveling in.

IMPORTANT! Do not lay the AC cable over the DC main switch or across the DC main switch connection block.

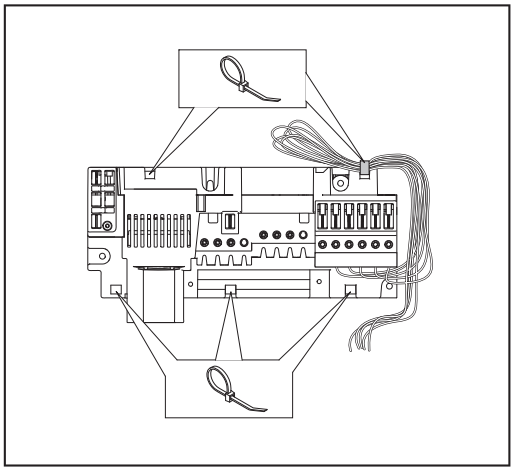

Example: AC cable

If long AC or DC cables are laid in the connection area in cable loops, fix the cables to the lugs designed for this purpose on the top and bottom of the connection block using cable ties.

Maximum AC-side Overcurrent Protection

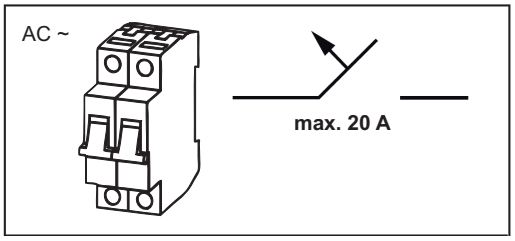

Inverter	Number of phases	Max. output	Max. protection
Fronius Galvo 208-240 1.5-1	1 / 2	1500 W	20 A
Fronius Galvo 208-240 2.0-1	1 / 2	2000 W	20 A
Fronius Galvo 208-240 2.5-1	1 / 2	2500 W	20 A
Fronius Galvo 208-240 3.1-1	1 / 2	3100 W	20 A

Additional external AC and/or DC disconnect

Depending on the installation, an additional external AC and/or DC disconnect may be required if the inverter is installed in a location not easily accessible to utility or fire personnel. Contact your local authorities for additional information.

Notes on Solar Module Grounding in the Inverter

Notes on Solar Module Grounding in the Inverter

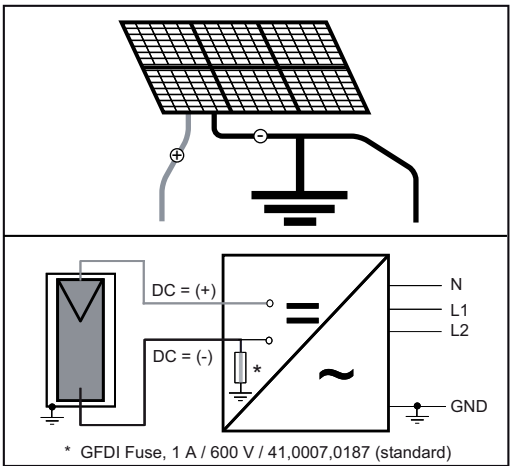

The inverter comes with a GFDI fuse for negatively grounded solar modules as standard.

CAUTION with ungrounded solar modules!

For ungrounded solar modules:
- remove the GFDI fuse
- Adjust the ground settings in the BASIC menu.

WARNING! An electric shock can be fatal. Danger of residual voltage from the capacitors.
When removing the GFDI fuse following commissioning of the inverter, wait until the capacitors have discharged. Discharge takes 3 minutes.

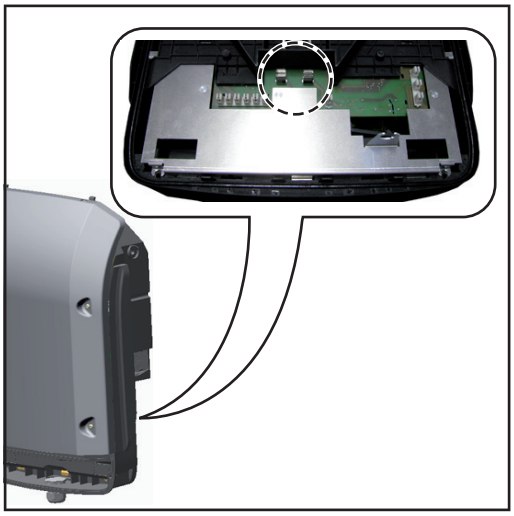

Fuse holder for solar module ground at the negative pole

The fuse holder for grounding the solar module is located on the back of the inverter.

The inverter can also be operated with solar modules, which require grounding at the positive pole.

IMPORTANT! The solar module is not grounded at the positive pole via the fuse in the inverter, but must be grounded via a separate fuse outside of the inverter. The GFDI monitoring of the inverter remains constant.

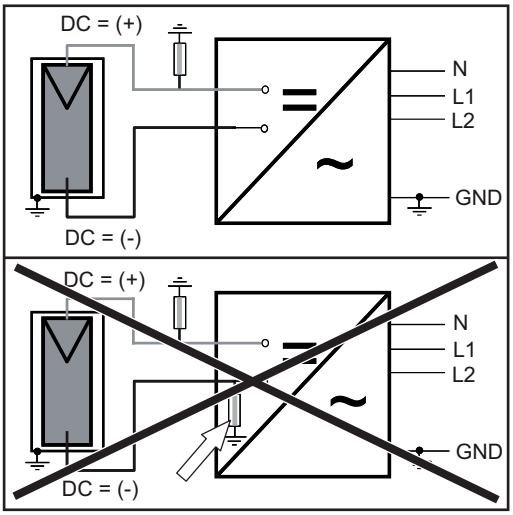

Solar module ground at positive pole

For solar modules ground at the positive pole:

- Remove GFDI fuse from the inverter.
- Mount the GFDI fuse outside of the inverter.
- Adjust the ground settings in the BASIC menu.

Solar modules ground at the negative pole, ungrounded solar modules	NEC2014
Solar modules ground at the positive pole	NEC2011

Notes on DC Connection

General Information about Solar Modules

In order to select suitable solar modules and get the most efficient use out of the inverter, please note the following points:

- The open circuit voltage of the solar modules increases as the temperature decreases (assuming constant irradiance). The open circuit voltage must not exceed the following values depending on the altitude:
  0–6561 ft. (0–2000 m) ... UDC max = 550 V
  > 6561–8202 ft. (> 2000–2500 m) ... UDC max = 540 V
  > 8202–9842 ft. (> 2500–3000 m) ... UDC max = 480 V
  > 9842 –11482 ft. (> 3000–3500 m) ... UDC max = 430 V

  Open circuit voltage which exceeds the given values will damage the inverter and void all warranty entitlements.

- Note the temperature coefficients in the solar module data sheet.
- More exact data for sizing the solar modules can be obtained using calculation tools such as the Fronius Configuration Tool (available at http://www.solarweb.com).
- See NEC table 690.7 for the appropriate code-related voltage adjustment factor for crystalline silicon modules, or use the manufacturer's specified voltage coefficient.

NOTE! Before connecting solar modules, make sure that the voltage specified by the manufacturer corresponds to the actual measured voltage.
Note the safety instructions and specifications of the solar module manufacturer regarding solar module grounding.

Inverter DC Connection

IMPORTANT! Check the polarity and voltage of the solar module strings. The difference between the individual solar module strings may not exceed 10 V.

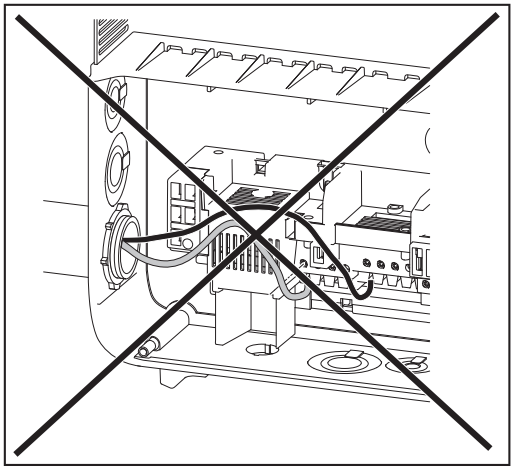

If DC cables are laid over the shaft of the DC main switch, or across the DC main switch connection block, they could be damaged when the inverter swivels in, or the inverter could be prevented from swiveling in.

IMPORTANT! Do not lay the DC cable over the DC main switch or across the DC main switch connection block.

Notes on Laying Data Communication Cables

Laying Data Communication Cables

IMPORTANT! Inverters may not be operated with an option card and two broken-out option card divisions.
In this case, a corresponding blanking cover (42,0405,2020) is optionally available from Fronius.

IMPORTANT! If data communication cables are to be used in the inverter, please note the following points:

- provide your own conduits for the data communication cables
- lay the communication cable in the supplied protective hose
- knock out the corresponding opening
- clean the knocked out opening
- insert the supplied cable bushing into the opening (if both openings have been knocked out, an additional cable bushing 42,0405,2019 is required)
- clip the inverter in the wall bracket
- insert the data communication cable through the cable bushing from the back
- when swiveling the inverter into place, ensure that the cables are not kinked, trapped, or damaged in any other way do not form any loops with the data communication cables
- lay data communication cables in the inverter data communication area and connect to the Solar Net connection sockets "IN" and "OUT,"
  insert the termination plugs in the remaining Solar Net connection sockets.

Notes on Clipping the Inverter into the Wall Bracket

Clipping the Inverter into the Wall Bracket

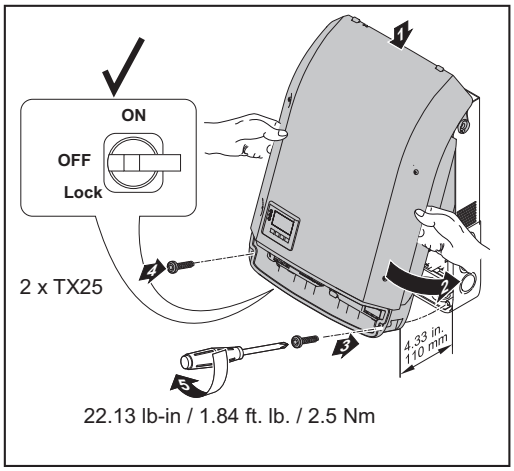

The side areas of the housing lid are designed to function as carrying grips and/or handles.

NOTE! For safety reasons, the inverter is fitted with a locking mechanism, which only allows the inverter to be swiveled into the wall bracket when the DC main switch is switched off.

- Only swivel and clip the inverter into the wall bracket when the DC main switch is switched off.
- Do not apply force when swiveling and clipping the inverter in.

The fixing screws in the inverter data communication area are to be used to fix the inverter to the wall bracket. Fixing screws must be properly tightened to ensure correct contact between the inverter and wall bracket.

CAUTION! Danger of damage to the inverter if screws are not properly tightened. Screws that are not properly tightened can cause arcs to occur during inverter operation, which could lead to a fire. Always tighten fixing screws with the specified torque.

Notes on Anti-theft device

Anti-Theft Device

An optional anti-theft device is included in the scope of delivery.
If required, the anti-theft device is installed before the inverter is screwed to the wall bracket.

To ensure that the fixing screws cannot fall out in the inverter's data communications area, these are fitted with a screw release.
To remove the fixing screw from the inverter
- Push the fixing screw upwards from the other side e.g. using needle-nose pliers
- Undo the fixing screw

Installing the Anti-Theft Device

IMPORTANT! Please refer to the instructions for attaching the inverter to the wall bracket.

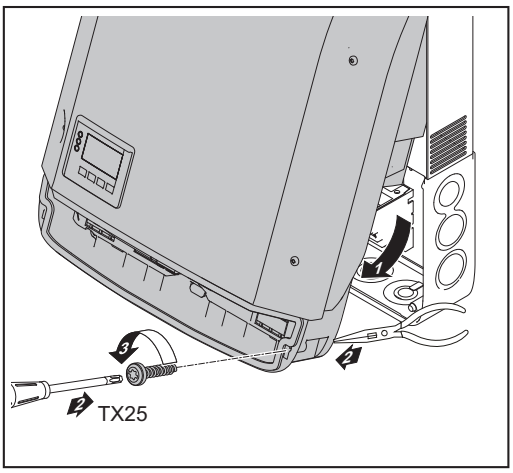

1 Swing the inverter out
2 Push the fixing screw upwards from the other side e.g. using needle-nose pliers
3 Undo the fixing screw

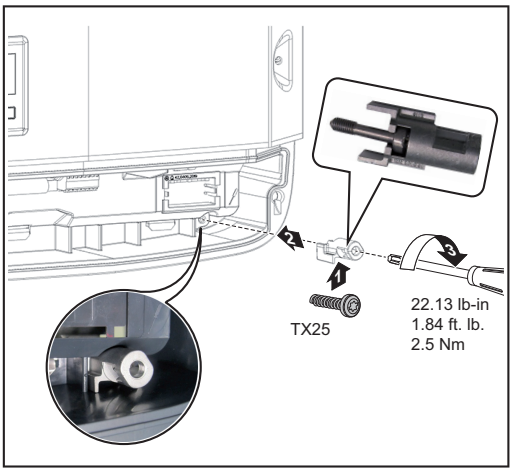

4 Insert the fixing screw into the anti-theft device
5 Insert the anti-theft device plus fixing screw into the inverter
6 Swing the inverter in
7 Tighten both fixing screws to the specified torque

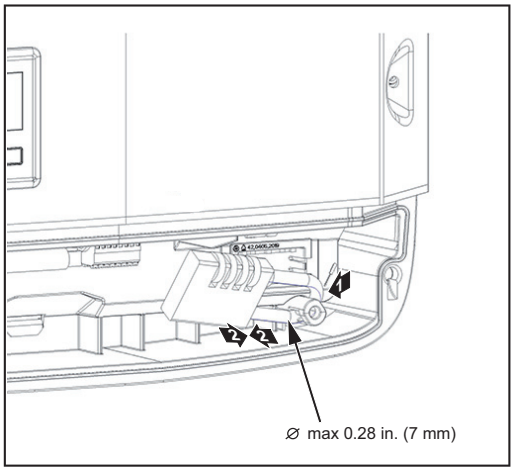

8 Fit the padlock to the anti-theft device

Notes on Software Updates

Notes on Software Updates

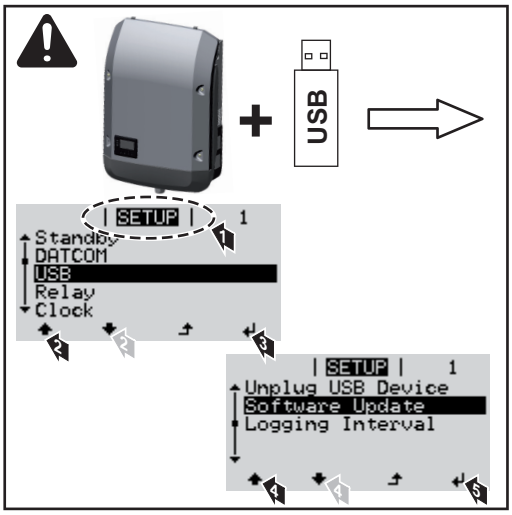

1. Insert the USB stick in the inverter data communication area
2. Access the Setup menu
3. Select the "USB" menu item
4. Select "Update Software"
5. Install the update

USB Stick as a Data Logger and for Updating Inverter Software

USB stick as a data logger

A USB stick connected to the USB A socket can act as a data logger for an inverter.

Logging data saved to the USB stick can at any time
- be imported into the Fronius Solar.access software via the included FLD file,
- be viewed directly in third-party applications (e.g., Microsoft® Excel) via the included CSV file.

Older Excel versions (up to Excel 2007) have a row limit of 65536.

Data on the USB stick

If the USB stick is used as a datalogger, three files are automatically created:

- FRONIUS.sys system file:
  This file saves information from the inverter that is irrelevant to the customer. The file must not be deleted individually. Only delete all files together (sys, fld, csv).

- DALO.fld log file:
  Log file for reading out data in Fronius Solar.access.

  You can find additional information on the Fronius Solar.access Software in the "DATCOM Detail" operating instructions at http://www.fronius.com

- DATA.csv log file:
  A log file for reading out data in a spreadsheet program (e.g., Microsoft® Excel)

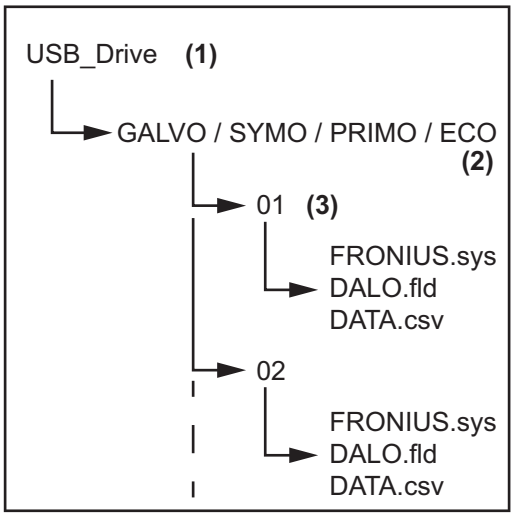

Data structure on the USB stick

(1) USB root directory
(2) Fronius inverter (Fronius Galvo, Fronius Symo, Fronius Primo, or Fronius Eco)
(3) Inverter number – can be set in the setup menu under DATCOM

If multiple inverters exist with the same inverter number, the three files are saved in the same folder. A number is appended to the file name (e.g., DALO_02.fld)

Structure of the CSV file:

	(1)	(2)	(3)	(4)	(5)	(6)	(7)
	A	B	C	D	E	F	G	H
1	SerialNr.:1234567899874563	21'						
2	Date	Time	Inverter No.	Device Type	Periode [s]	Energy [Ws]	Energy L[Var]	Energy C[Var]
3	30.03.2013	17:15:19	1	247				
4	30.03.2013	17:15:19	1	247				
5	30.03.2013	17:15:19	1	247				
6	30.03.2013	17:15:20	1	247				

	(8)	(9)
I	J	K	L	M	N	O	P	Q	R	S
Uac L1 [V]	Uac L2 [V]	Uac L3 [V]	Iac L1 [A]	Iac L2 [A]	Iac L3 [A]	Udc S1[V]	Idc S1[A]	Description		
								Display Information		
								V0.1.5 Build 0		
								28.03.2013 23:59:49 Info 017, Counter 0092		
								Logging Start		

(1) ID
(2) Inverter no.
(3) Inverter type (DATCOM code)
(4) Logging interval in seconds
(5) Energy in watt-seconds with reference to the logging interval
(6) Inductive reactive power
(7) Capacitive reactive power
(8) Averages over the logging interval (AC voltage, AC current, DC voltage, DC current)
(9) Additional information

Data Quantity and Memory Capacity

One USB stick with a memory capacity of 1 GB, for example, can record logging data at a logging interval of 5 minutes for approx. 7 years.

CSV file
CSV files can store only 65535 rows (data records) (up to Microsoft® Excel version 2007, afterwards there is no limit).
At a logging interval of 5 minutes, the 65535 rows are written within approx. 7 months (CSV data size of approx. 8 MB).
To avoid a loss of data, the CSV file should be backed up to a PC within these 7 months and deleted from the USB stick. If the logging interval is set longer, this time frame is extended accordingly.

FLD file
The FLD file should not be larger than 16 MB. At a logging interval of 5 minutes, this corresponds to a storage duration of approx. 6 years.
If the file exceeds this 16 MB limit, it should be backed up to a PC, and all data should be deleted from the USB stick.

After you have backed up the data and removed it from the USB stick, the stick should be immediately reinserted so that it can record logging data; no further steps are required.

NOTE! A full USB stick can lead to the loss of data or the overwriting of data. When inserting the USB stick, make sure that it has a sufficient memory capacity.

Buffer Memory

If the USB stick is removed (e.g. to back up data), the logging data are written to a buffer memory in the inverter.
As soon as the USB stick is reinserted, the data are automatically transferred from the buffer memory to the USB stick.

The buffer memory can store a maximum of 6 logging points. Data are logged only during inverter operation (power greater than 0 W). The logging interval is fixed at 30 minutes. This leads to a timeframe of 3 hours for recording data to the buffer memory.

When the buffer memory is full, the oldest data in the buffer memory are written over with the new data.

IMPORTANT! The buffer memory requires a constant power supply.
If there is an AC power outage during operation, all data in the buffer memory are lost. The automatic night switch-off must be deactivated so that the data are not lost at night (set "Night Mode" to ON – see chapter "Setting and Displaying Menu Items," section "Displaying and Setting Parameters in the 'DATCOM' Menu Item").
On the Fronius Eco, the buffer memory also functions with just a DC supply.

Suitable USB Sticks

Due to the number of USB sticks on the market, we cannot guarantee that every USB stick will be recognized by the inverter.

Fronius recommends using only certified, industrial USB sticks (look for the USB-IF logo).

The inverter supports USB sticks using the following file systems:
- FAT12
- FAT16
- FAT32

Fronius recommends that the USB stick only be used for recording logging data or for updating the inverter software. USB sticks should not contain any other data.

USB symbol on the inverter display, e.g., in the "NOW" display mode:

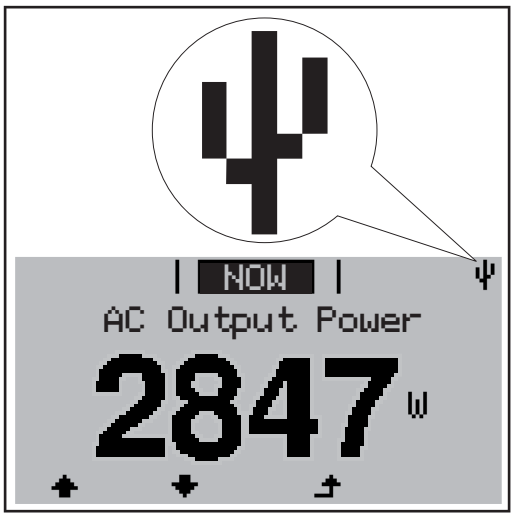

When the inverter recognizes a USB stick, the USB symbol will appear at the top right of the display.

When inserting the USB stick, make sure that the USB symbol is displayed (it may also be flashing).

NOTE! Please be aware that in outdoor applications the USB stick may only function in a limited temperature range. Make sure, for example, that the USB stick will also function at low temperatures for outdoor applications.

USB Stick for Updating Inverter Software

The USB stick can be used to help end customers update inverter software via the USB menu item in the SETUP menu item: the update file is first saved on the USB stick and then transferred to the inverter. The update file must be saved in the USB stick root directory.

Removing the USB Stick

Safety information for removing a USB stick

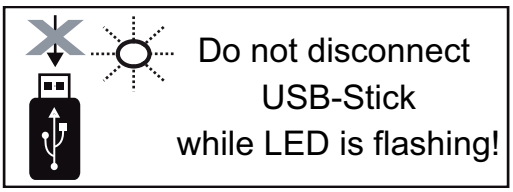

IMPORTANT! To prevent a loss of data, the connected USB stick should only be removed under the following conditions:

- via the SETUP and "Safely remove USB / hardware" menu items
- when the "Data Transfer" LED is no longer flashing or illuminated.

Notes on Maintenance

Maintenance

NOTE! For horizontal installation positions and when installing outside: check once per year that all screws are secured tightly.

Maintenance and repair work must only be carried out by authorised personnel.

Cleaning

The inverter and the display can be cleaned with a damp cloth if necessary.
Do not use any cleaning agents, abrasive cleaners, or solvents to clean the inverter.

Serial Number Sticker for Customer Use

Serial Number Sticker for Customer Use

The inverter's serial number can be found on the rating plate on the bottom of the inverter.
The installation position may make it difficult to access or read the serial number, e.g. if the inverter has been installed in a dark or shaded area.

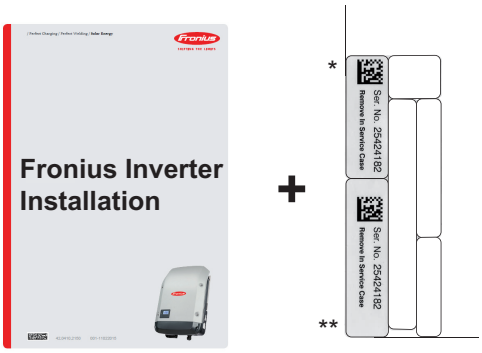

Two serial number stickers are enclosed with the installation instructions for the inverter:

*	57 x 20 mm
**	67 x 20 mm

The customer can attach these stickers themselves in a clearly visible place, e.g. on the front of the inverter or on the operating instructions.

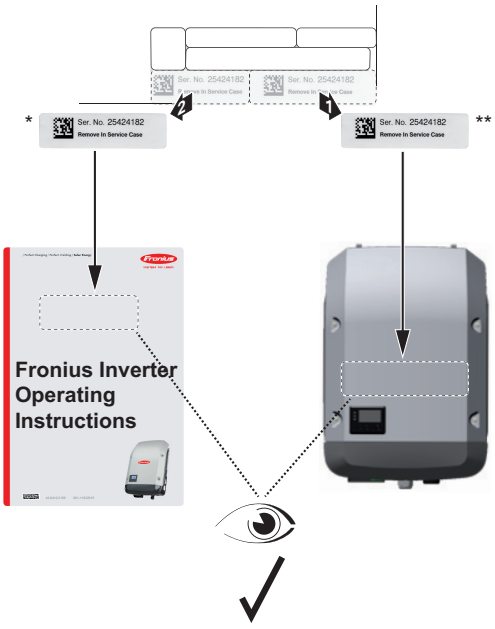

Application example:
Serial number stickers on the operating instructions and on the front of the inverter.

Fronius Worldwide - www.fronius.com/addresses

Fronius International GmbH
4600 Wels, Froniusplatz 1, Austria
E-Mail: pv-sales@fronius.com
http://www.fronius.com

Fronius USA LLC Solar Electronics Division
6797 Fronius Drive, Portage, IN 46368
E-Mail: pv-us@fronius.com
http://www.fronius-usa.com

Under http://www.fronius.com/addresses you will find all addresses of our sales branches and partner firms!